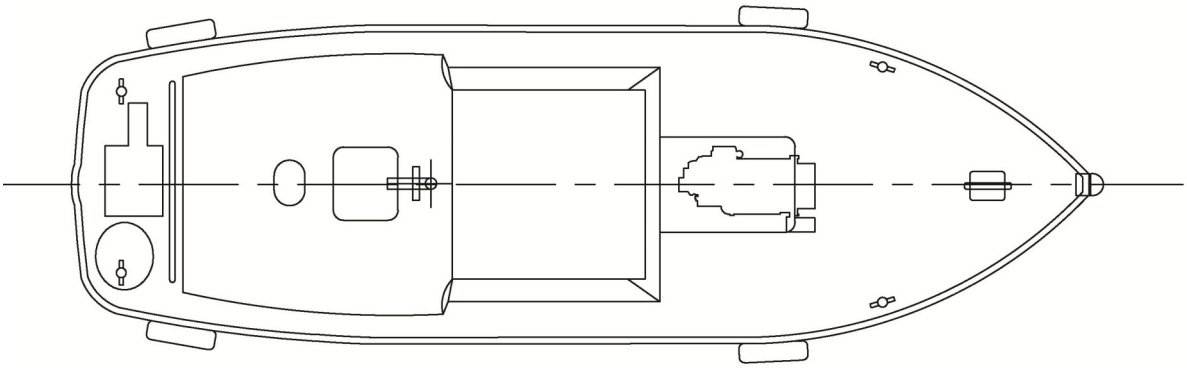

Deck Layout

Scale

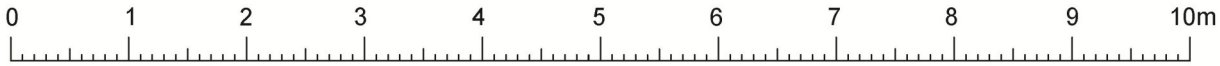

WORKBOAT / SAFETY BOAT

WILWREN

GENERAL

Type of Vessel:	Steel workboat / safety boat
Builder:	Mustang Marine
Build Place:	UK
Class:	MCA
Certification:	Workboat Code Category 4 (3 miles)

DIMENSIONS

Length O.A.	9.2m
Beam O.A.	3.0m
Draft Aft:	0.8m

PERFORMANCE

Free Running Speed:	7 Knots
Bollard Pull:	1 tbp

PROPULSION SYSTEM

Main Engine:	Mermaid Mariner (Ford 2735)
Total Power:	135HP/82Kw @2600rpm
Marine Transmission:	PRM 502 2:1
Propulsion:	1 x 580mm single FP Propeller

DECK EQUIPMENT

Towing Post

ELECTRICAL SYSTEM

24V DC:	Single battery bank

TANK CAPACITIES

Fuel Oil:	1200ltrs

ACCOMMODATION

Wheelhouse with Day Facilities

NAVIGATION & COMMUNICATION EQUIPMENT

Compass:	Ritchie
VHF Radio:	Icom IC-M401Euro
Handheld VHF:	Icom M3 Euro
AIS:	SMR Transponder